Pantrac – Lighting effects for ceilings

This ceiling washlight makes the task of creating uniform uplighting incredibly easy
Pantrac wall-mounted luminaires focus on adding lighting effects to ceilings. The luminaires bring out the support structure and lend rooms a higher appearance. Ceilings decorated with stucco and paintings are given a new dimension. Pantrac blends into its architectural surroundings. The archetypal cubic design remains unobtrusive letting the luminaire recede into the background.
The luminaire is available in different sizes with a range of light distribution patterns. This ensures optimum illumination of the ceiling with a minimum number of luminaires. In this way, Pantrac represents not only an effective, but also a cost-efficient, lighting solution.

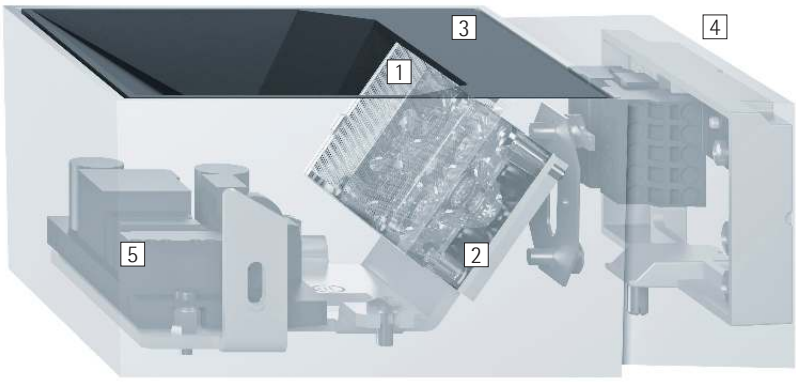

Structure and characteristics
The features described here are typical of products in this range. Special versions may offer additional or varying features. A comprehensive description of the features of individual products can be found on our website.

1 ERCO Spherolit lens
- Light distributions: wide beam or deep beam

2 ERCO LED-module
- High-power LEDs: warm white (2700K or 3000K) or neutral white (3500K or 4000K)
- Collimating lens made of optical polymer

3 Cover frame
- Polymer, black lacquered

4 Housing and wall plate
- White (RAL9002)
- Cast aluminium, powder-coated

5 Control gear
- Switchable, phase dimmable or DALI dimmable
- Phase dimmable version: Dimming with external dimmers possible (trailing edge)

Variants on request
- Housing: 10,000 further colours

Please contact your ERCO consultant.

Design and application:
www.erco.com/pantrac-w

Pantrac Wall-mounted luminaires

Outstanding uniformity
To meet the stringent standards of ceiling washing, ERCO has developed luminaires that generate exceptionally uniform levels of illuminance.

Wide or deep beam distribution
The wide or deep beam distribution Spherolit lenses allow the light distribution to be matched to the lighting task at hand.

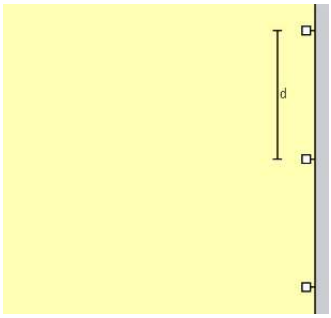

Wide luminaire spacing with ceiling washlighting
ERCO's efficient photometrics enable selected luminaires to be spaced particularly far apart, thereby minimising the number of luminaires required.

Special characteristics

- Different light distributions: wide or deep
- Outstanding uniformity
- Wide luminaire spacing with ceiling washlighting
- ERCO high-power LEDs
- Efficient Spherolit technology
- Different light colours
- Excellent thermal management
- EMC-optimised
- Various construction sizes
- Switchable
- Phase dimmable
- DALI dimmable

Pantrac Wall-mounted luminaires – Luminaire arrangement

Ceiling washlights
Wide beam, Deep beam

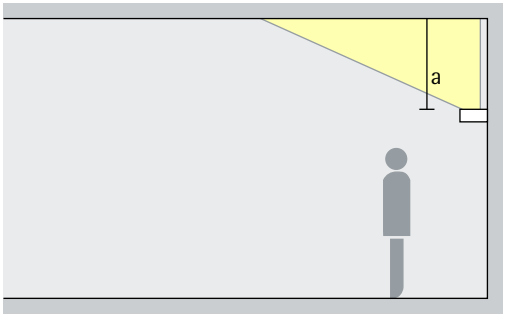

General lighting
Illuminated ceilings produce a high and spacious impression of the room. The distance of Pantrac to the ceiling depends on the design criteria, but should not be less than 0.8m. In rooms with a ceiling height of 3m, this corresponds roughly to the height of the door frame.

Arrangement: a > 0.8m

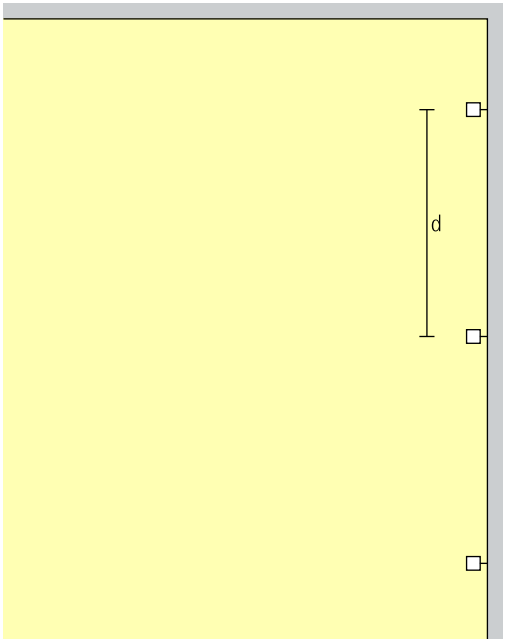

The distance (d) of luminaires with wide beam light distribution may be up to 4 times the ceiling offset (a).

Arrangement: d = 4 x a

The distance (d) of luminaires with deep beam light distribution may be up to 3 times the ceiling offset (a).

Arrangement: d = 3 x a

Parish church, Lotte. Photography: Dirk Vogel, Altena.

Pantrac Wall-mounted luminaires

Construction size

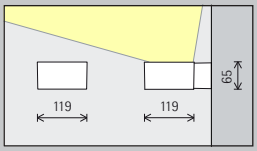

119mm

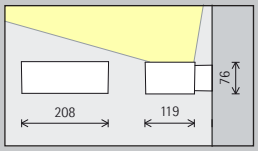

208mm

LED module
Maximum value at 4000K CRI 82

12W/1650lm	24W/3300lm

Light colour

12W/1650lm		24W/3300lm	
2700K CRI 92	3500K CRI 92	2700K CRI 92	3500K CRI 92
3000K CRI 92	4000K CRI 82	3000K CRI 92	4000K CRI 82
3000K CRI 97	4000K CRI 92	3000K CRI 97	4000K CRI 92

Light distribution

12W/1650lm	24W/3300lm
Ceiling washlights	Ceiling washlights
Wide beam	Wide beam
Deep beam	Deep beam

Control

12W/1650lm	24W/3300lm
Switchable	Switchable
Phase dimmable	Phase dimmable
DALI	DALI

Colour (housing)

12W/1650lm	24W/3300lm
White	White
10,000 colours *	10,000 colours *

* available on request

Article numbers and planning data:
www.erco.com/014692

Design and application:
www.erco.com/pantrac-w